Publishing Excellence Inspiring Progress
ARISTON PUBLICATIONS
MatSci Express
ISSN: 2997-8440 www.aristonpubs.com/matsci-express https://doi.org/10.69626/mse.2026.0155

RESEARCH ARTICLE

Energy-Efficient OTA Circuit Utilizing Carbon-based Transistor for Low Power Circuit: The Optimal Analysis

Wakeel Ahmad[1], Mohammad Anas[2,*]

ABSTRACT: In this study, we investigate the design and modeling of a multi cascode operational transconductance amplifier (OTA). The suggested OTAs are triple-cascode operational transconductance amplifiers (TCOTAs) built using CNTFETs (carbon nanotube field effect transistors) and MOSFETs at the 45 nm technology node. The suggested architectures use both conventional MOSFETs and CNTFETs because they are hybrid in nature. The published simulation analysis of the TCOTAs shows that the proposed hybrid devices perform significantly better than traditional ones. The DC gain, output resistance, power consumption, and bandwidth of the proposed hybrid device have all been found to greatly outperform those of conventional devices. By altering the CNT diameter, the recommended TCOTAs' efficiency can be altered or enhanced. In NCNT-PMOS-TCOTA, the delay has been lowered by 106%, power dissipation is reduced by 133%, and the power delay product is dropped by 382% whenever compared to pure CMOS-TCOTA. PCNT-NMOS-TCOTA achieves a 93% lower delay, a 3.2% lower power dissipation, and a 99.7% lower power delay product over pure CMOS-TCOTA. Furthermore, the operational performance of CNT-based OTAs is investigated by altering the CNTs' diameter (D_{CNT}).

Keywords: CNTFET, CMOS, Triple Cascode, OTA, Delay, and Power

Received: 28 June 2026; Revised: 08 July 2026; Accepted: 26 July 2026; Published Online: 22 August 2026

1. INTRODUCTION

In analog systems, the operational transconductance amplifier is both the most crucial and frequently utilized component. In an operational amplifier, the output voltage is a multiple of the input voltage times the gain. In contrast, the gain in OTA is defined as the ratio of the output current to the input voltage. Because the transconductance amplifier transforms an input voltage into a current at the output terminal, OTA is a voltage-controlled current source [1]. Compared to an operational amplifier (OP-AMP), OTAs have certain advanced features such as a broader bandwidth, a more fantastic dynamic range, a higher output resistance, a wider bandwidth, and no extra phase difficulties. They can also be used for circuits with capacitive loads [1-5, 8]. An OTA is helpful for many electrical systems, including filters, oscillators, comparators, and analog-to-digital converters, thanks to its adaptability. Additionally, OTA can occasionally serve as the operational amplifier's core amplifier. The gain and power consumption of OTAs constructed with scaled MOSFETs (Metal Oxide Semiconductor Field Effect Transistors) are both low [9, 10]. To keep linearity and increase output impedance without sacrificing bandwidth, these OTAs incorporate a directional cascode design. A perfect OTA has an infinite output resistance. Due to the extremely high output impedance node ($R_{out}=R_{ocasn}\|R_{ocasp}$) depicted in Figure 2(c), I_{out} almost entirely flows through external load capacitance C_L. To get a higher gain, we have added more cascoded devices and placed them in the lower and upper branches [3-5].

[1] Department of Electrical Engineering, College of Applied Industrial Technology, Jazan University, Baish, 45142, Kingdom of Saudi Arabia.
[2] Department of Computer Science and Engineering, GN Group of Institutes, Greater Noida, Uttar Pradesh, 201310, India.

* Author to whom correspondence should be addressed: mohdanas@gnct.co.in (Mohammad Anas)

© Ariston Publications 2026. All rights reserved.

Traditional OTAs were created using a variety of technologies. Contrary to bipolar-based technology, which results in high-speed OTA, it uses more power, which is a significant problem. As an alternative, complementary metal oxide semiconductor (CMOS) technology is used to produce high DC gains while consuming little power; however, as a MOSFET's channel length is scaled down to the nanoscale, the short channel effect becomes more pronounced and limits the performance of the device [11-14]. Innovations in materials and device topologies have to be developed rapidly to replace Si and bulk CMOS and aid in further extending Moore's law. In addition to having unambiguous benefits over existing ones, a perfect new material and gadget would perform better than existing ones, allow for new applications, and offer a large cost reduction.

Three different OTA types have been designed and investigated. One of them, referred to as a pure CMOS-OTA, uses conventional NMOS and PMOS as sources and sinks. The N-CNTFET-PMOS-OTA, additionally referred to as NCNTFET-PMOS-OTA, uses conventional PMOS as sources and N-CNTFETs as sinks. PCNTFET-NMOS-OTA is the third type of OTA, employing P-CNTFETs as sources and conventional NMOS as sinks. The simulation analysis demonstrated that the CNT-based OTAs, especially NCNTFET-PMOS-OTA, significantly outperformed bulk CMOS. A significant percentage of the performance simulation parameters have been improved. A comparison of pure CMOS-OTA and hybrid OTAs shows that hybrid OTA performance is far superior to that provided by conventional CMOS-OTA.

Furthermore, it has been identified that the physical characteristics of CNT-based OTAs, including the number of CNTs (N), inter-CNT pitch (S), and CNT diameter (D_{CNT}), may be employed to determine the gain margins and phase margins. We observed that the CNT-based OTAs are employed at their best when N=20, D_{CNT}=1.5 nm, and S=20 nm are employed. CNT-base OTAs are reasonably stable according to the stability analyses [3, 5, 11].

2. CARBON NANOTUBE FIELD EFFECT TRANSISTOR

One of the possible alternatives for non-silicon electronics is the discovery of carbon nanotubes in 1993 by Ijima of NEC Japan. They have greater tensile strength, electrical conductivity, thermal conductivity, and almost 1D ballistic transport capability compared to steel. They are also more thermally and electrically conductive than steel and diamond. The two categories of carbon nanotubes are single-wall carbon nanotubes (SWCNT) and multi-wall carbon nanotubes (MWCNT). Figure 1 shows how the chirality vector or roll-up vector, also known as a pair of indices (n, m), can show how graphite sheets are wrapped in CNT. Using the chiral angle (θ) and chiral vector, there are three different types of SWCNTs. If n = m = 0, SWCNT is an armchair type and lies between 0° and 30°, a zig-zag type if n=m=0 and θ lies between 0° and 30°, and a chiral type otherwise [6-7, 10].

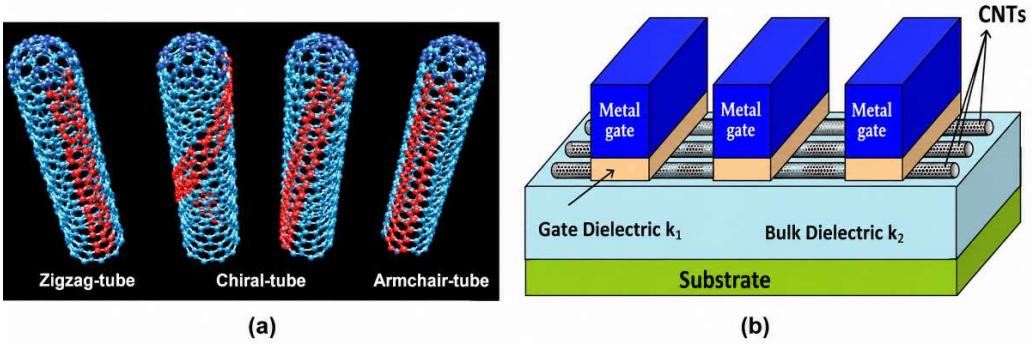

Fig. 1. (a) SWCNTs and MWCNTs (b) Schematic diagram of a CNTFET

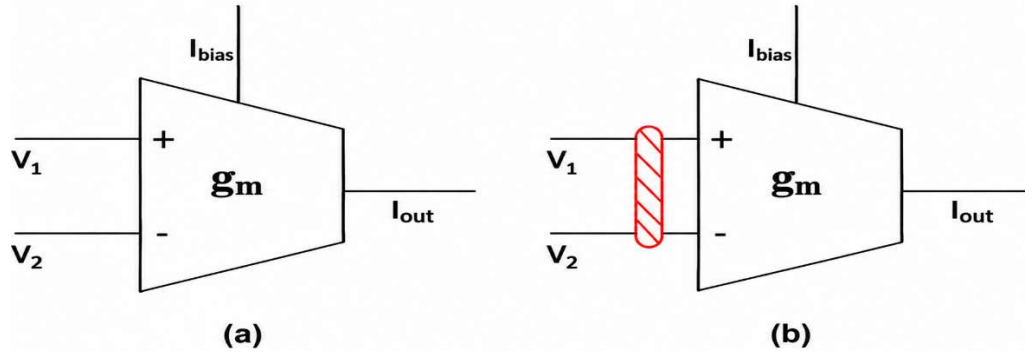

Fig. 2. (a) Symbols of an OTA (b) Symbol of a CNT-based OTA.

© Ariston Publications 2026. All rights reserved.

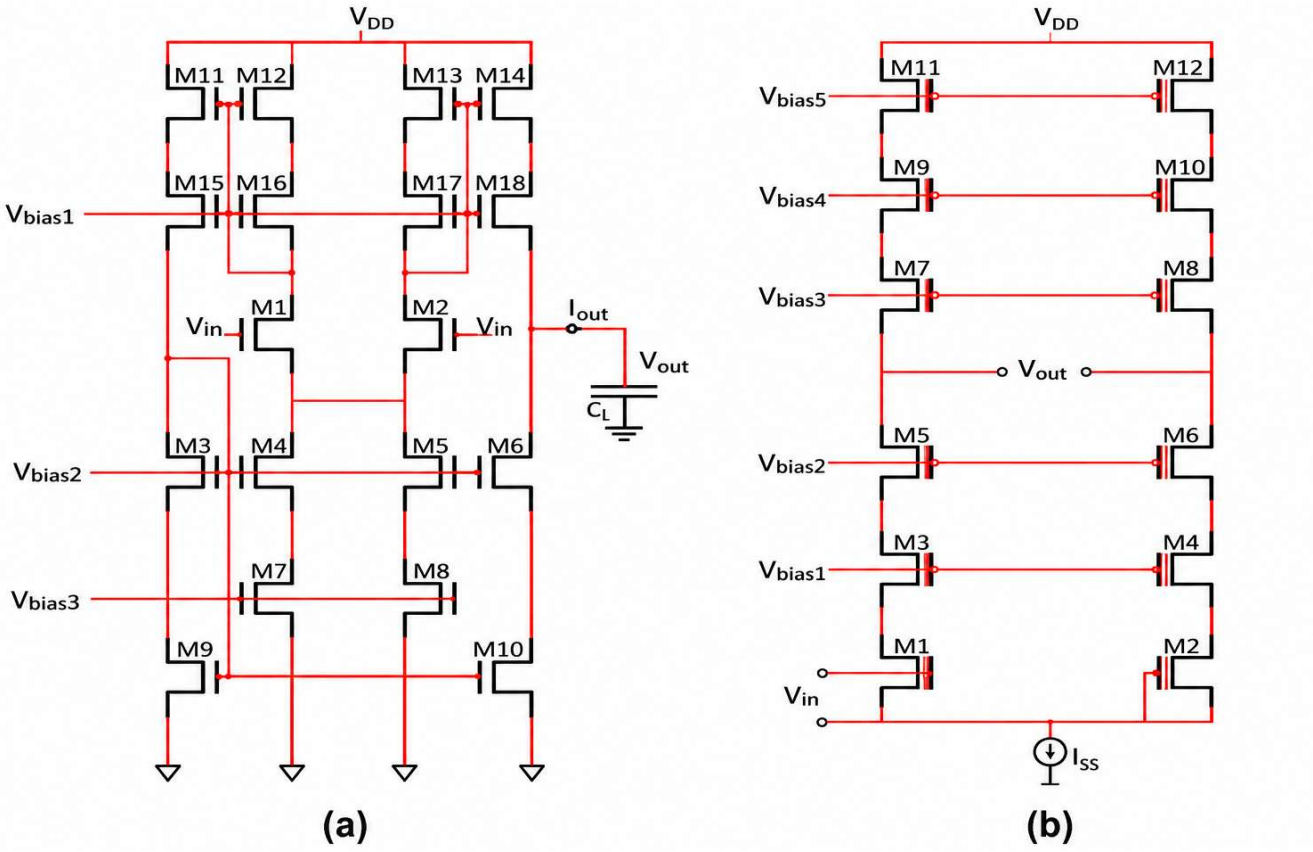

Fig. 3. (a) Conventional CMOS-COTA and (b) pure CNTFET-based triple cascode topology.

Carbon nanotube field effect transistors are one of the critical uses of CNTs (CNTFET). The figure depicts a three-dimensional schematic of a CNTFET. A CNTFET's channel is built by a parallel combination of SWCNTs, just like a conventional MOSFET. One-dimensional ballistic charge carrier movement, high mobility, high drive current, and deficient power consumption are all benefits of CNTFETs [3].

Figures 2(a) and 2(b) present the symbols for an OTA and a CNT-based OTA, respectively. These symbols are also applicable to triple cascode OTAs. Since the used devices are nanoscale, we use OTA for a significant gain and to reduce the power supply voltages.

Despite the aforementioned benefits, OTAs have significant shortcomings. Significant issues with conventional OTA are speed and gain degradation in the submicron range. As device dimensions are scaled down to the submicron level, it has been observed that the gain factor $g_m r_o$ degrades. A potential solution to the gain deterioration problem in a conventional OTA is the idea of cascoding [2, 13].

A transistor is also capable of converting a voltage signal into a current signal in a common-source configuration. The cascade of a CS stage and a CG stage is known as a "cascode" topology, and it has several advantageous features. A potential solution to the gain deterioration problem in a conventional OTA is the concept of cascoding. We have increased the number of cascaded devices and placed them in the lower and upper branches in order to get a higher gain. In order to achieve an even bigger benefit, we acknowledge that each branch has additional cascode devices [2, 5]. In Figure 3(b), the "Triple cascode operational amplifier" topology circuit is illustrated with gains of the order of $(g_m r_o)^2/2$. I_{out} almost totally flows through external load capacitance C_L because of the circuit's incredibly high output impedance node ($R_{out}=R_{ocasn} \parallel R_{ocasp}$) [1].

The conventional CMOS-based cascode OTA (COTA) circuit and pure CNTFET-based triple cascode topology used for the proposed and standard CNTFET-based triple cascode OTAs (TCOTAs) are seen in Figures 3(a) and 3(b), respectively. The NCNTFET-PMOS-TCOTA and PCNTFET-NMOS-TCOTA are two distinct CNTFET-based triple cascode OTAs that have been designed and simulated.

3. RESULTS AND DISCUSSION

The Efficiency of NCNTFET-PMOS-TCOTA and PCNTFET-NMOS-TCOTA have been simulated and evaluated by comparing DC gain, 3-dB bandwidth, output resistance, and average power of OTAs. The proposed hybrid TCOTAs' performance can be further improved by optimizing the CNT diameter used in various CNTFETs. Performance evaluations of the proposed CNT-based TCOTAs have been conducted for N = 20 and have all been compared. As shown in Figure 4(a), the dc gain of

© Ariston Publications 2026. All rights reserved.

NCNTFET-PMOS-TCOTA and PCNTFET-NMOS-TCOTA greatly varies with DCNT. The first dc gain enhancement is caused by lower screening and scattering effects as well as strong transconductance [5, 7]. However, as DCNT becomes larger (>1.4 nm), the gain rapidly declines as a result of an increase in scattering and screening effects. The following equation provides the gain formula.

$$\text{Dc gain } (A_V) = g_{mn}(R_{out}) = g_{mn}(R_{ocasn} \| R_{ocasp}) \quad (1)$$

Where the g_{mn} transconductance of the NCNTFET is greater than the transconductance of the bulk NMOS transistors [1-3]. As a result, NCNTFET-NMOS-TCOTA has a greater DC gain than PCNTFET-NMOS-TCOTA.

When illustrated in Figure 4(b), the output resistance remains constant in NCNTFET-PMOS-TCOTA and PCNTFET-NMOS-TCOTA when CNT diameter increases. However, in NCNTFET-NMOS-TCOTA, for D_{CNT} (1.0-1.2 nm), it reduces significantly, for D_{CNT} (1.2-1.4 nm), it diminishes, and for D_{CNT} > 1.4 nm, it remains constant. Smaller CNTs may exhibit greater R_{OUT} and fewer screening and scattering effects as a result [6,9-13]. Additionally, as the CNT diameter increases, the effect of R_{OUT} reduction overrides the transconductance rise. Smaller CNTs may exhibit greater R_{OUT} and fewer screening and scattering effects as a result [5, 8]. Additionally, as the CNT diameter increases, the effect of R_{OUT} reduction overrides the transconductance rise.

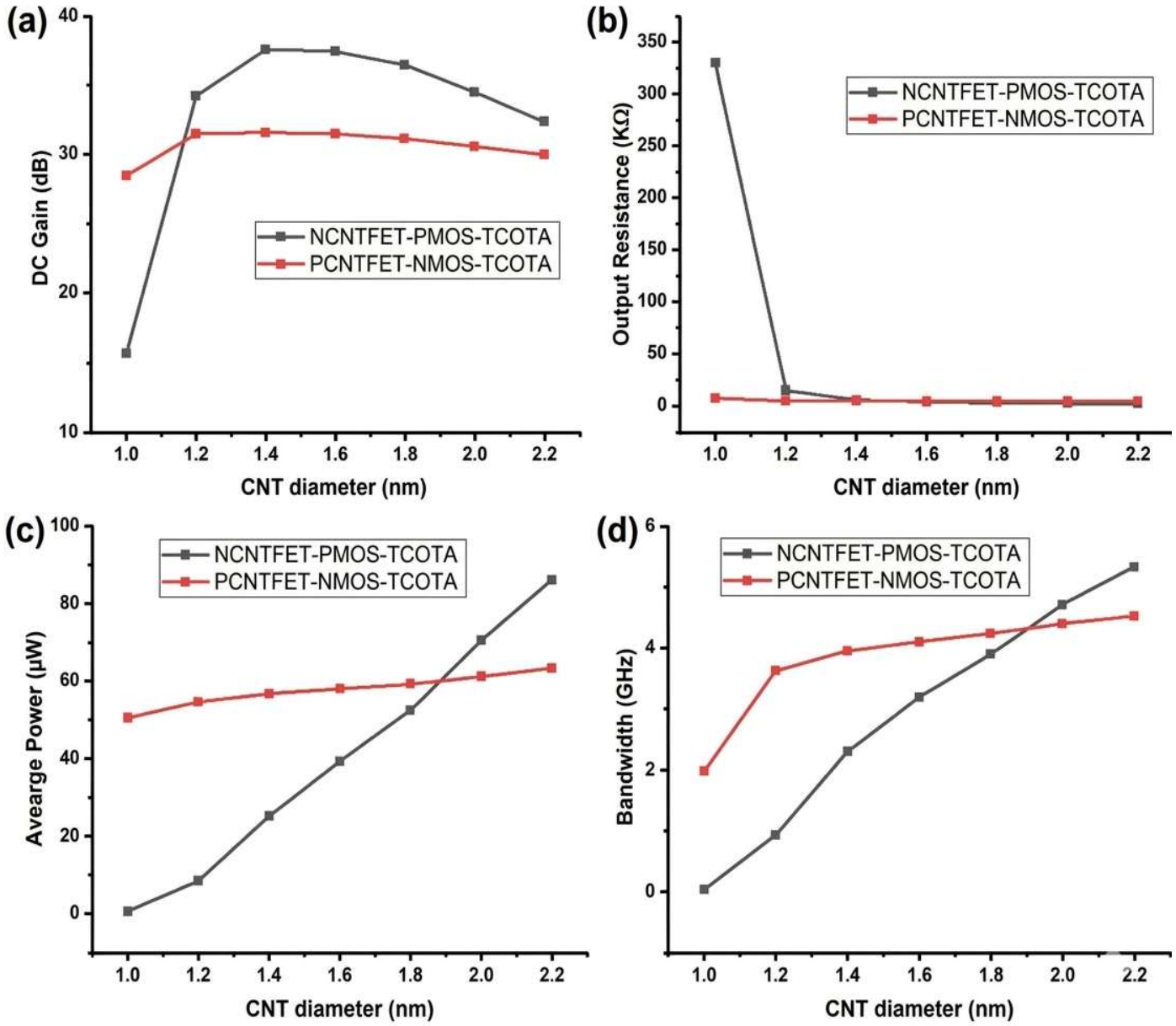

Fig. 4. Effect of altering the CNT diameter in the proposed CNT-based TCOTAs on (a) dc gain, (b) output resistance, (c) average power, and (d) 3-dB bandwidth.

 © Ariston Publications 2026. All rights reserved.

Table 1. Comparison of the operation and performance of TCOTA circuits based on CNT and on conventional CMOS technology at power supply V_{DD}=0.9 Volts, load capacitance C_L=1 pF, W_N=381.5nm, and W_P=W_N at 45 nm technology node [15-16].

S. No.	Parameter	NCNTFET-PMOS		PCNTFET-NMOS		Pure-CMOS	
		My work	[5]	My work	[5]	My work	[5]
1	DC gain	37.69	36	31.56	27.9	28.13	24.98
2	Bandwidth (MHz)	2800	0.44	4060	1.39	3550	1.82
3	Output resistance (KΩ)	5.33	5.59	5.31	4.44	6.18	4.70
4	Average power (uW)	32.39	11.17	57.45	9.14	59.58	13.12
5	Slew rate (V/us)	930	24.9	1012	36.5	951	18.2
6	CMRR (dB)	40.3	75.7	39.5	81.2	36.3	86.4
7	Phase margin (deg)	89.28	68.74	87.78	82.9	86.89	74.67
8	Gain Margin (dB)	24	67	31	76.5	18	71

Table 2. Comparison of the DELAY and POWER of TCOTA circuits based on CNT and conventional CMOS technology.

Parameters	NCNTFET-PMOS-TCOTA	PCNTFET-NMOS-TCOTA	CMOS-TCOTA
Delay (pS)	29	31	60
Average Power (µW)	22.14	50	51.6
PDP (µW×pS) (Power×Delay)	0.642×10^{-15}	1.550×10^{-15}	3.096×10^{-15}

The average power dissipation in CNT-based TCOTAs can be observed in Figure 4(c), along with how it fluctuates with DCNT. Circuits using NCNTFET-NMOS-TCOTA and PCNTFET-NMOS-TCOTA both show a significant rise in power dissipation when DCNT rises. For DCNT > 1.2 nm, the power dissipation, however, noticeably rises. Similarly, the increased driving capability results from the increase in transconductance. Additionally, Eq. (2) states that the bandgap decreases as the CNT diameter increases [7, 11, 14, 15].

$$\text{Bandgap} = 0.8\ \text{eV} / D_{CNT} \quad (2)$$

A reduced bandgap induces a lower threshold voltage in CNTFETs, enhancing leakage and static power dissipation. Additionally, average power increases more in NCNTFET-PMOS-TCOTA than PCNTFET-NMOS-TCOTA when CNT diameter increases. The increase in NCNTFET-PMOS-TCOTA driving current brought on by the addition of more CNTFETs justifies this.

The correlation between the bandwidth of CNT-based TCOTAs and CNT diameter is illustrated in Figure 4(d). This can be explained by the fact that, as shown by Eq. (3), R_{OUT} decreased as a result of the expanding D_{CNT}. The bandwidth of CNT-based TCOTAs is improved by increasing transconductance, which is likewise a result of increasing CNT diameter [6-8]. The formula is:

$$f_{3dB} = 1/2R_{OUT}C_L \quad (3)$$

For CNTs with a smaller diameter, the driving current will decrease since the bandgap and subsequently, the threshold voltage of the CNTFET is significant.

4. CONCLUSION

In this study, the design and modeling of three OTA circuits are demonstrated. One uses the common bulk NMOS and PMOS transistor technology, while the other two use hybrid technology. The proposed hybrid architectures make use of conventional MOSFETs and CNTFETs. The two proposed hybrid structures are PCNT-NMOS-TCOTA and NCNT-PMOS-TCOTA, respectively. The extraordinary and distinctive properties of CNTFETs have helped to significantly increase the performance of OTAs employing CNTFETs in modelling and comparing studies of these circuits. The outcomes for circuits have shown that NCNT-PMOS-TCOTA is an alternative to bulk CMOS-TCOTA. When compared to pure CMOS-TCOTA, NCNT-PMOS-TCOTA has a delay that is 106% less than CMOS-TCOTA, a power dissipation that is 133% less, and a power delay

© Ariston Publications 2026. All rights reserved.

product that is 382% less. In contrast to pure CMOS-TCOTA, PCNT-NMOS-TCOTA delivers a 93% lower dealy, a 3.2% lower power dissipation, and a 99.7% lower power delay product. Consequently, the operational performance of CNT-based OTAs is investigated using HSPICE and varying the CNTs' diameter (DCNT) at a 0.9 V power supply.

DECLARATIONS

Ethical Approval

We affirm that this manuscript is an original work, has not been previously published, and is not currently under consideration for publication in any other journal or conference proceedings. All authors have reviewed and approved the manuscript, and the order of authorship has been mutually agreed upon.

Funding

No Funding

Availability of data and material

All of the data obtained or analyzed during this study is included in this paper.

Conflicts of Interest

The authors declare that they have no financial or personal interests that could have influenced the research and findings presented in this paper. The authors alone are responsible for the content and writing of this article.

Data availability statement

The data supporting the findings of this study are available from the corresponding author upon reasonable request.

REFERENCES

[1] Baker, R.J., **2019**. *CMOS: circuit design, layout, and simulation*. John Wiley & Sons.

[2] Razavi, B., **2001**. Design of analog CMOS integrated circuits.

[3] Hashmi, F., Nizamuddin, M. and Zaidi, A., **2022**, November. 9 V Graphene Transistor Based Triple Cascode Operational Transconductance Amplifier: A Comparative Analysis. In *International Conference on Nanotechnology: Opportunities and Challenges* (pp. 249-253). Singapore: Springer Nature Singapore. https://doi.org/10.1007/978-981-99-4685-3_34

[4] Zhang, X. and El-Masry, E.I., **2007**. A novel CMOS OTA based on body-driven MOSFETs and its applications in OTA-C filters. *IEEE Transactions on Circuits and Systems I: Regular Papers*, *54*(6), pp.1204-1212. https://doi.org/10.1109/TCSI.2007.897765

[5] Hashmi, F., Nizamuddin, M., Zaidi, A., Ansari, H.R. and Khan, S., **2023**, September. 1-D Graphene Transistor Based Energy-Efficient Novel Operational Transconductance Amplifier for Low Power Nanoelectronics. In *International Conference on Smart and AI Enabled Technology for Sustainable Development* (pp. 429-437). Singapore: Springer Nature Singapore. https://doi.org/10.1007/978-981-96-9370-2_32

[6] Iijima, S., **1991**. Helical microtubules of graphitic carbon. *nature*, *354*(6348), pp.56-58. https://doi.org/10.1038/354056a0

[7] Appenzeller, J., **2008**. Carbon nanotubes for high-performance electronics—Progress and prospect. *Proceedings of the IEEE*, *96*(2), pp.201-211. https://doi.org/10.1109/JPROC.2007.911051

[8] Zhijian, Y., Chengyan, M., Tianchun, Y. and Taishan, M., **2008**. Design and analysis of a Gain-Enhanced, fully differential telescopic operational transconductance amplifier. *Journal of semiconductors*, *29*(2), pp.269-274.

[9] Bano, N., Nizamuddin, M., Ahmad, W., Hashmi, F. and Alattab, A.A., **2025**. Design and performance of graphene nanoribbon FET-based OTA for fast and energy-efficient electronics in IoT. *Journal of Nanoelectronics and Optoelectronics*, *20*(2), pp.181-192. https://doi.org/10.1166/jno.2025.3741

[10] Tomar, M.K., Singh, V. and Laxya, L., **2021**, October. A study on development of CNTFET based analog and digital circuits. In *2021 4th International Conference on Recent Developments in Control, Automation & Power Engineering (RDCAPE)* (pp. 392-398). IEEE. https://doi.org/10.1109/RDCAPE52977.2021.9633592

[11] Hashmi, F., Nizamuddin, M. and Amin, S.U., **2025**. Performance evaluation and optimization of triple cascode operational transconductance amplifiers using GNRFET technology for low power smart devices. *Materials Research Express*, *12*(2), p.025601. https://doi.org/10.1088/2053-1591/adb08d

[12] Al-Hashimi, J. and Abugharbieh, K., **2021**, June. Design of a switched-mode operational amplifier operating with a 0.5 V supply voltage. In *2021 19th IEEE International New Circuits and Systems Conference (NEWCAS)* (pp. 1-4). IEEE.

 © Ariston Publications 2026. All rights reserved.

https://doi.org/10.1109/NEWCAS50681.2021.9462733

[13] Cen, M., Song, S. and Cai, C., **2017**. A high performance CNFET-based operational transconductance amplifier and its applications. *Analog Integrated Circuits and Signal Processing*, *91*(3), pp.463-472. https://doi.org/10.1007/s10470-017-0951-1

[14] Ali, Z., Nizamuddin, M., Prasad, D., Ravi, A. and Hashmi, F., **2025**. Carbon Nanotube FET Based High-Performance Folded Cascode Op-Amp with Gain Enhancement-Performance Evaluation, Comparison and Optimization. *Journal of Nanoelectronics and Optoelectronics*, *20*(7), pp.756-766. https://doi.org/10.1166/jno.2025.3789

[15] Hashmi, F., Nizamuddin, M. and Ahmad, W., **2023**. A novel carbon nanotube field effect transistors based triple cascode operational transconductance amplifier: an optimum design. *Journal of Nanoelectronics and Optoelectronics*, *18*(5), pp.534-546. https://doi.org/10.1166/jno.2023.3432

[16] Lin, A., Wan, G., Deng, J. and Wong, H.P., **2008**. A quick user guide on stanford university carbon nanotube field effect transistors (CNFET) HSPICE model v. 2.2. 1.

© Ariston Publications 2026. All rights reserved.